M3000580

M 40 40 mm Cartridge

Single lever sink mixer
swivel spout
G.3/8" stainless steel flexible hose
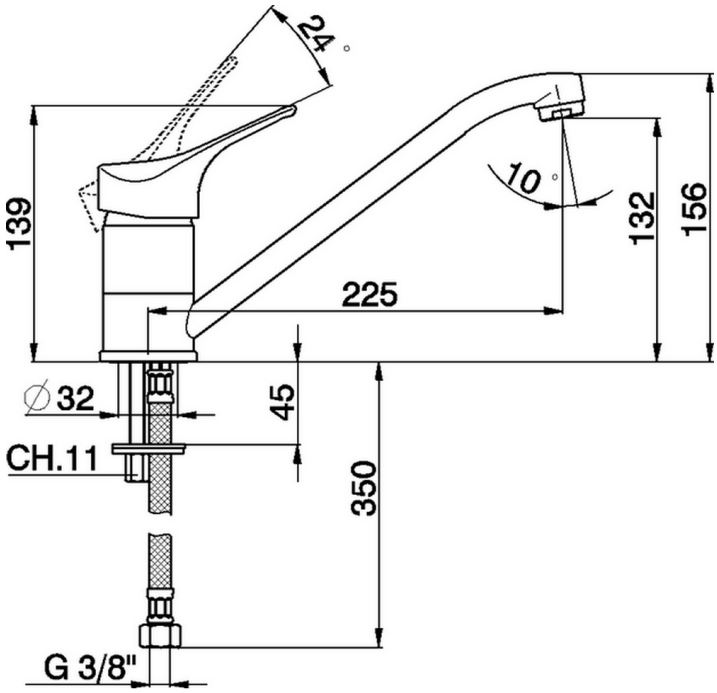
21 Chrome